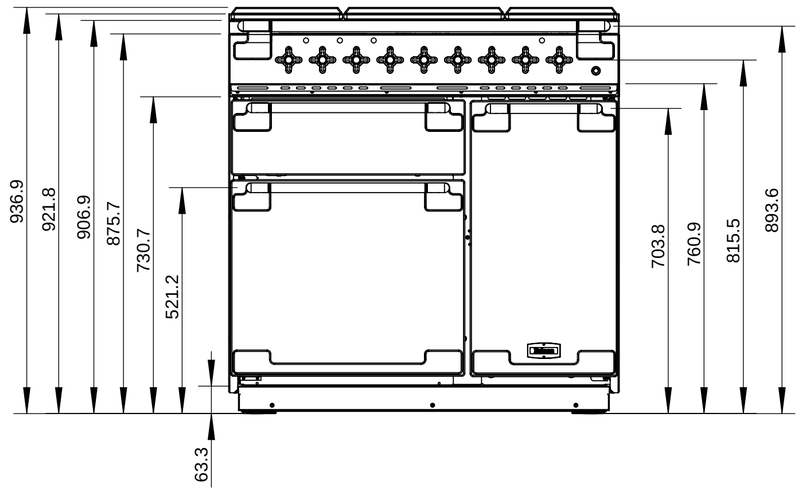
936.9
921.8
906.9
875.7
730.7
521.2
63.3
703.8
760.9
815.5
893.6

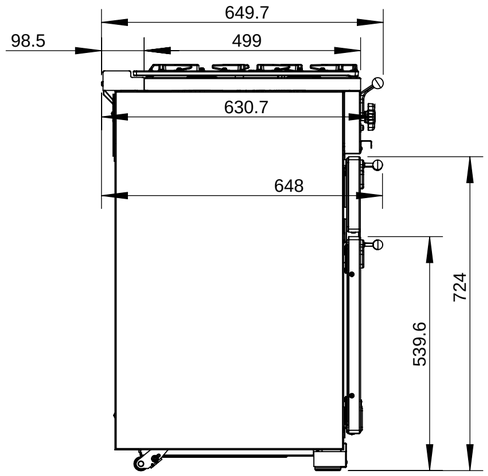
649.7
98.5
499
630.7
648
539.6
724

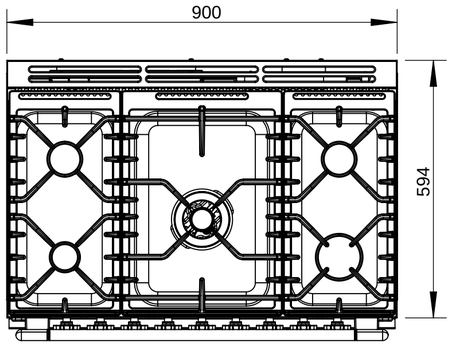
900
594