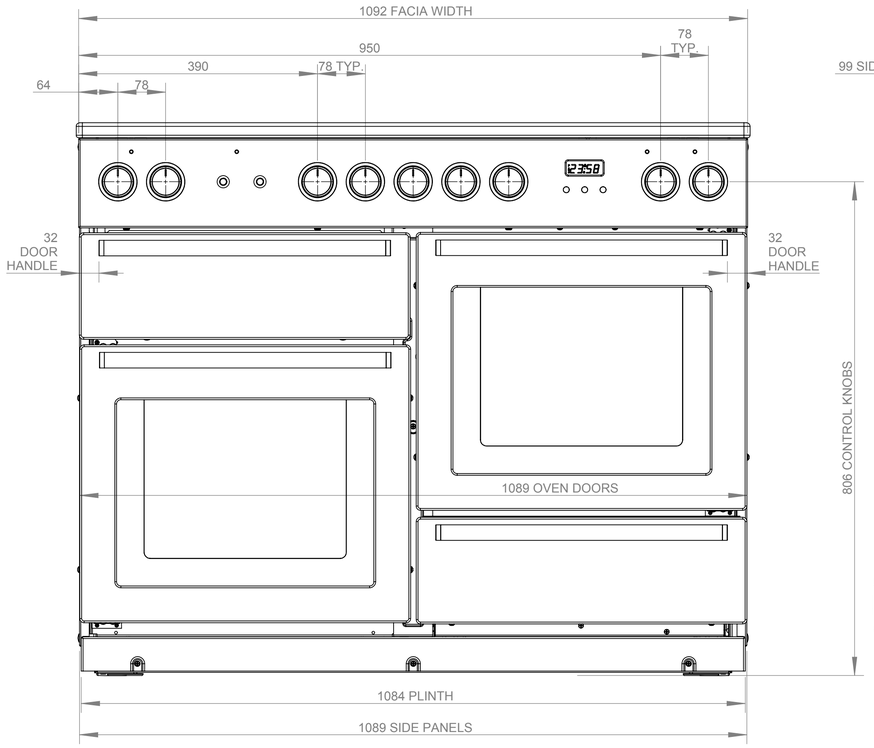
1092 FACIA WIDTH
950
390
78 TYP
78
TYP
64
78
32
DOOR
HANDLE
32
DOOR
HANDLE
1089 OVEN DOORS
806 CONTROL KNOBS
1084 PLINTH
1089 SIDE PANELS

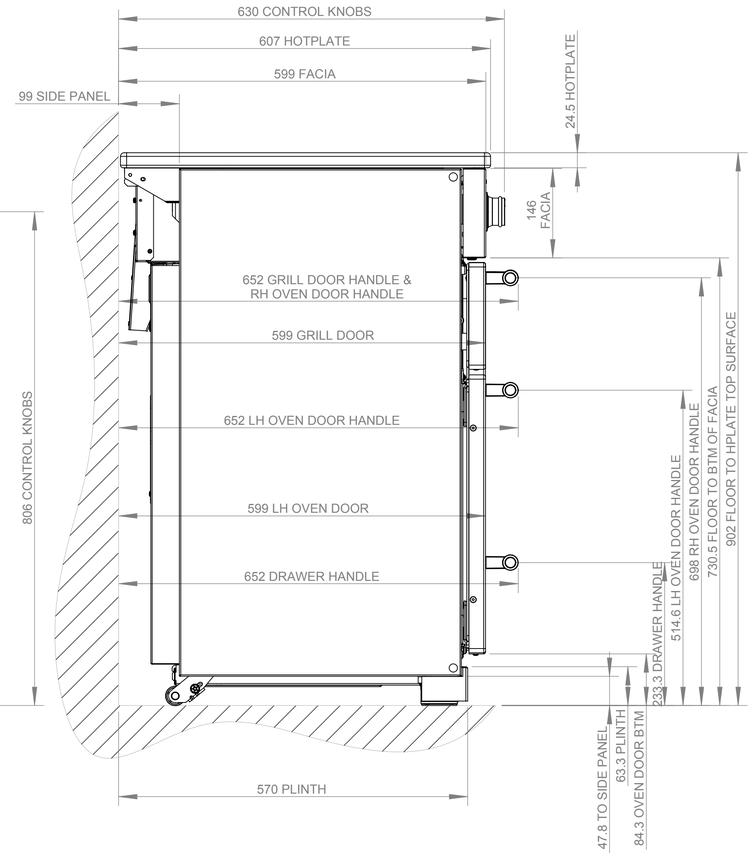
630 CONTROL KNOBS
607 HOTPLATE
599 FACIA
99 SIDE PANEL
24.5 HOTPLATE
146
FACIA
652 GRILL DOOR HANDLE &
RH OVEN DOOR HANDLE
599 GRILL DOOR
652 LH OVEN DOOR HANDLE
599 LH OVEN DOOR
652 DRAWER HANDLE
902 FLOOR TO HPLATE TOP SURFACE
730.5 FLOOR TO BTM OF FACIA
698 RH OVEN DOOR HANDLE
514.6 LH OVEN DOOR HANDLE
233.3 DRAWER HANDLE
47.8 TO SIDE PANEL
63.3 PLINTH
84.3 OVEN DOOR BTM
570 PLINTH

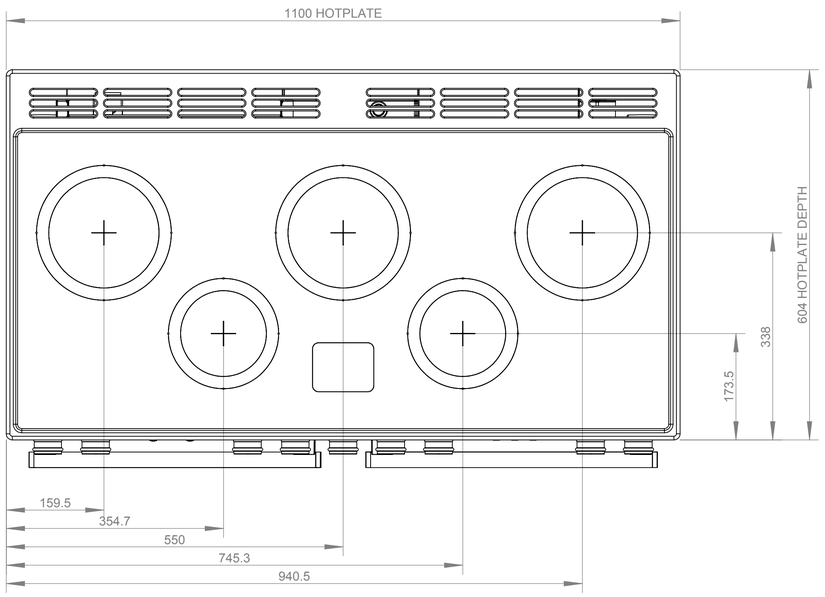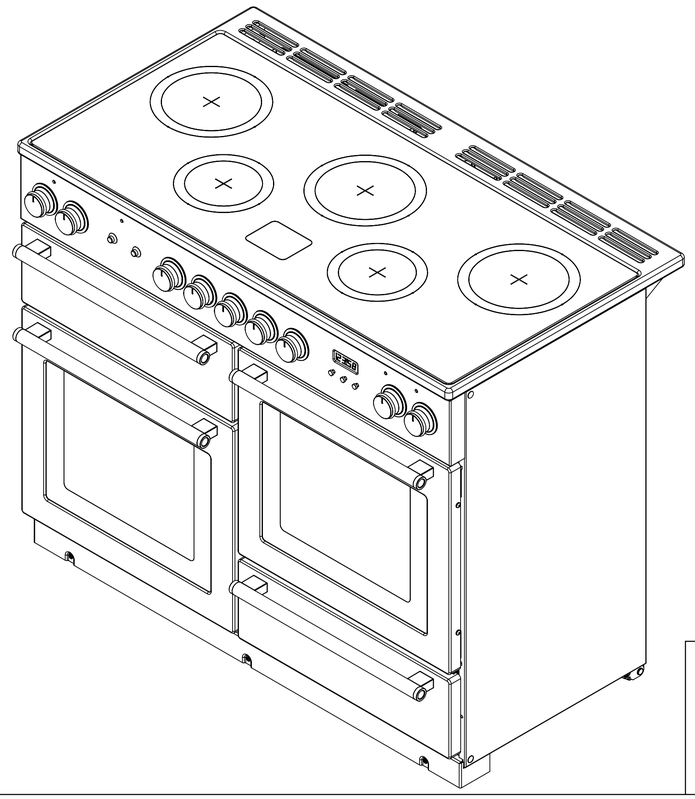
1100 HOTPLATE
604 HOTPLATE DEPTH
338
173.5
159.5
354.7
550
745.3
940.5