ISSUE No & DATE	DETAILS OF CHANGE. MODIFICATION RECORD NUMBER. ECR NUMBER.
01 19.12.18	For reference only

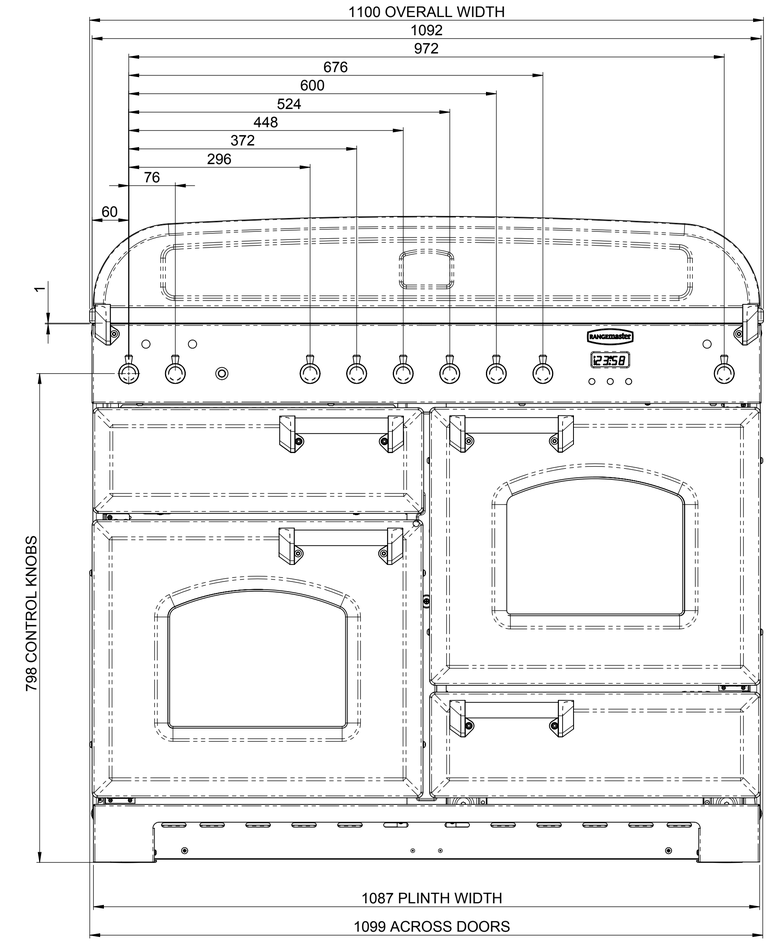

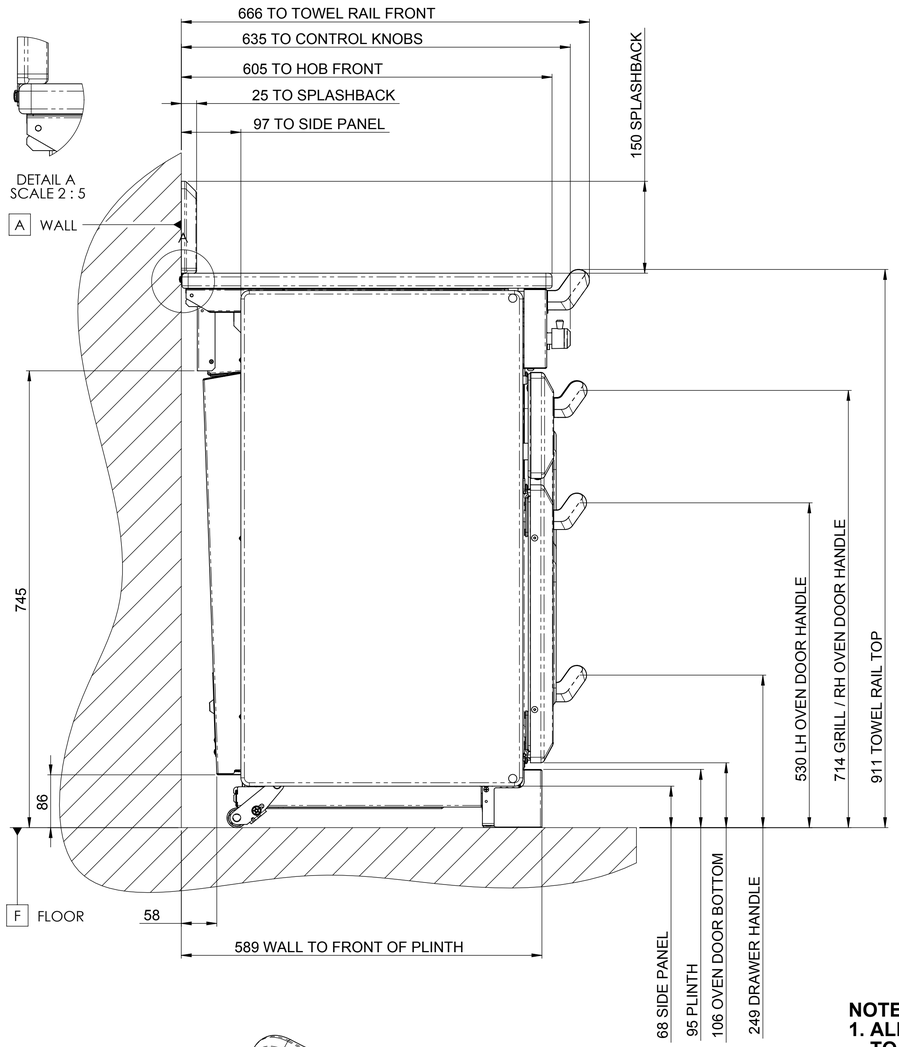

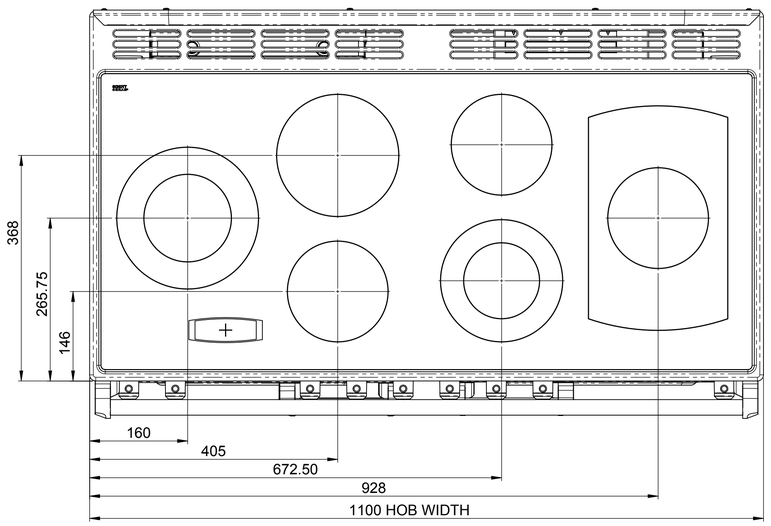

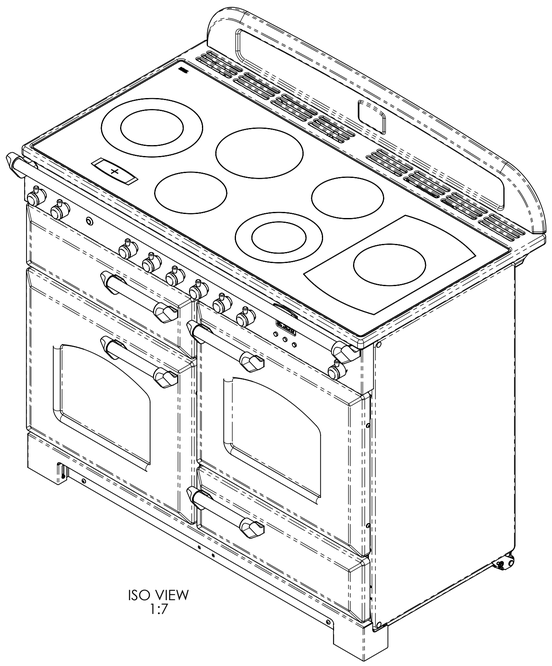

ISO VIEW
1:7

NOTES:

1. **ALL DIMENSIONS ARE NOMINAL & ROUNDED TO THE NEAREST WHOLE NUMBER, UNLESS SHOWN OTHERWISE.**
2. **ALL HEIGHT DIMENSIONS ARE BASED ON THE COOKER BEING SET AT ITS LOWEST LEVEL (IE. 935 DIMENSION), THEY WILL CHANGE ACCORDINGLY WITH THE AMOUNT OF HEIGHT ADJUSTMENT.**
3. **FOR DOCUMENTATION PURPOSES THE COOKER IS HEIGHT ADJUSTABLE AS DETAILED IN OBP.**
4. **THIS DRAWING IS FOR REFERENCE PURPOSES ONLY. A 'PDF' COPY OF THIS DRAWING FORMS PART OF THE 'APPLIANCE PRODUCT SPECIFICATION' HELD ON THE 'COMMON' DRIVE. CHANGES TO THIS DRAWING REQUIRE THE 'PDF' FILE TO BE UPDATED.**

Clarence Street, Royal Leamington Spa
Warwickshire CV31 2AD, United Kingdom
Telephone: 44 (0)1926 457400
Direct Fax: 44 (0)1926 457611
Web: www.agarangemaster.co.uk

DO NOT SCALE OR GUESS. IF IN DOUBT, ASK.
ALL MATERIALS MUST COMPLY WITH RoHS & REACH

ALL MACHINING TO BE FREE FROM BURRS.
TOLERANCES UNLESS OTHERWISE STATED:-
ANGULAR ±30'
LINEAR DIMENSIONS — WHOLE NUMBERS ±0.5 / ONE DECIMAL PLACE ±0.15
CIRCULAR HOLES ±0.15
CNC BEND RADII 1.25 +1 -0
CNC BEND ANGLES ±2°
ALL DIMENSIONS IN MILLIMETRES

PROJECTION

A1 DRAWING BORDER CREATED 01/08/2012 BY DJB

THIS DRAWING IS THE PROPERTY OF RANGEMASTER AND REPRODUCTION IN WHOLE OR PART MAY NOT BE MADE WITHOUT THEIR WRITTEN CONSENT.

MATERIAL AND FINISH SPECIFICATION

DRAWN	PROJECT	ASSEMBLY
MC		

SCALE 1:5

TITLE RM Classic 110 Ceramic

PART NUMBER A0011751