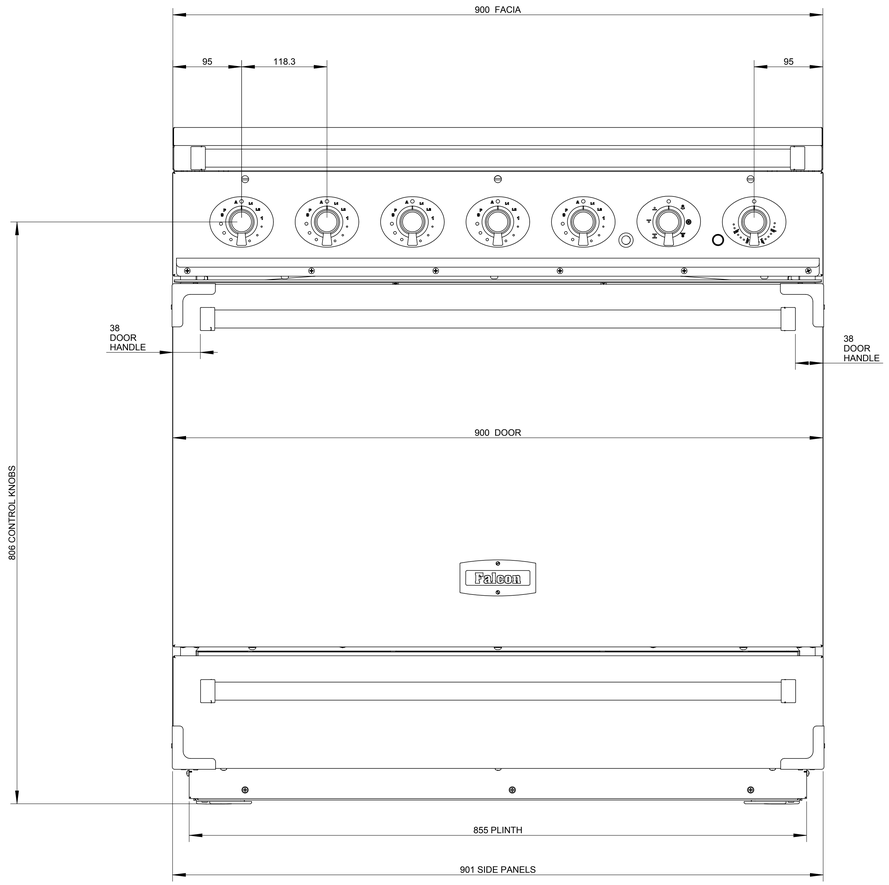
900 FACIA
95
118.3
95
38
DOOR
HANDLE
38
DOOR
HANDLE
900 DOOR
806 CONTROL KNOBS
Falcon
855 PLINTH
901 SIDE PANELS

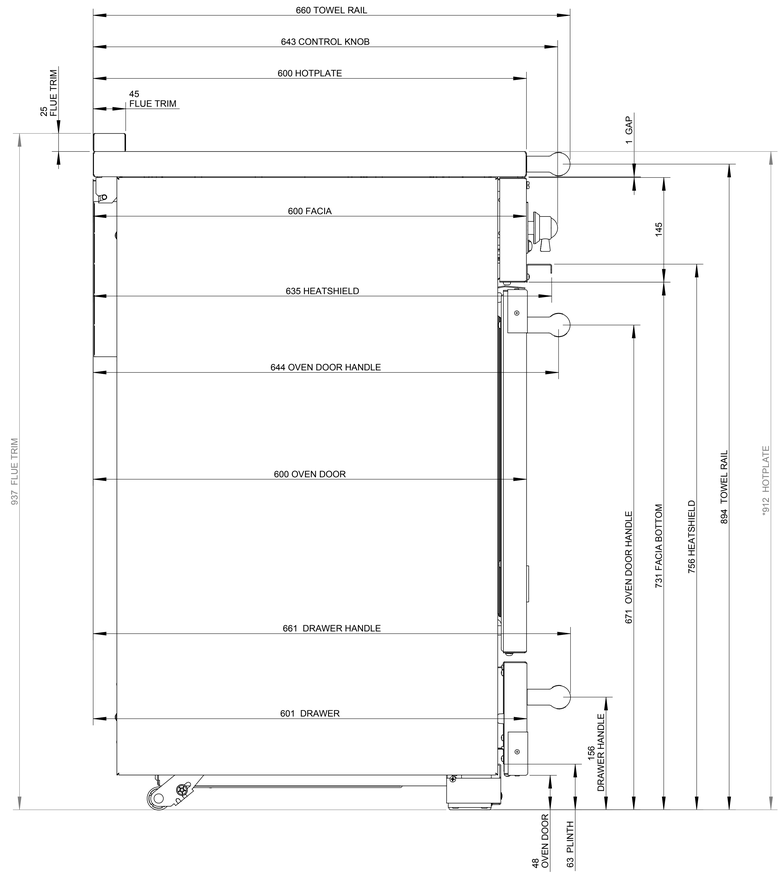
660 TOWEL RAIL
643 CONTROL KNOB
600 HOTPLATE
25
FLUE TRIM
45
FLUE TRIM
1 GAP
600 FACIA
145
635 HEATSHIELD
644 OVEN DOOR HANDLE
937 FLUE TRIM
600 OVEN DOOR
671 OVEN DOOR HANDLE
731 FACIA BOTTOM
756 HEATSHIELD
894 TOWEL RAIL
*912 HOTPLATE
661 DRAWER HANDLE
601 DRAWER
156
DRAWER HANDLE
48
OVEN DOOR
63 PLINTH

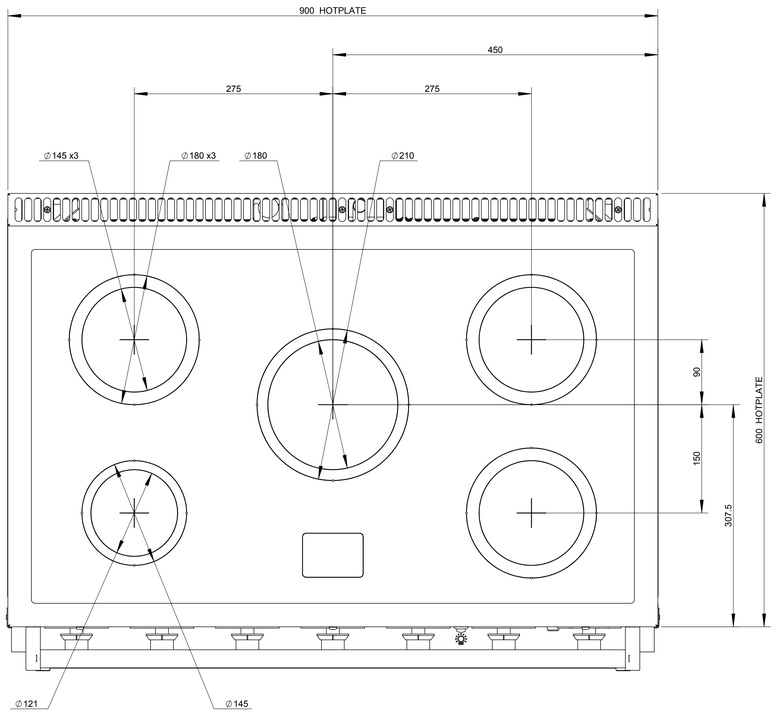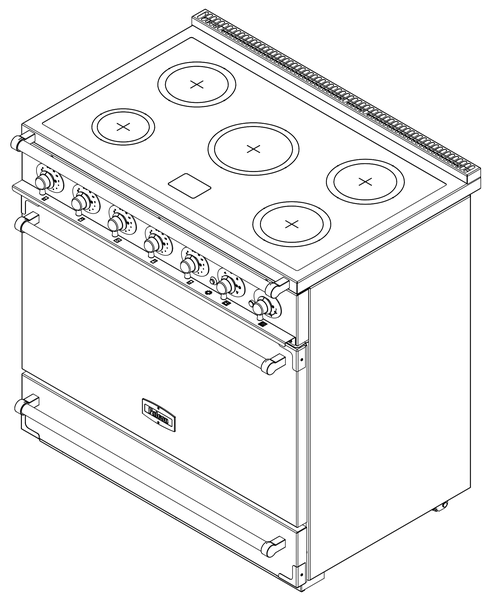
900 HOTPLATE
450
275
275
∅145 x3
∅180 x3
∅180
∅210
90
150
307.5
600 HOTPLATE
∅121
∅145