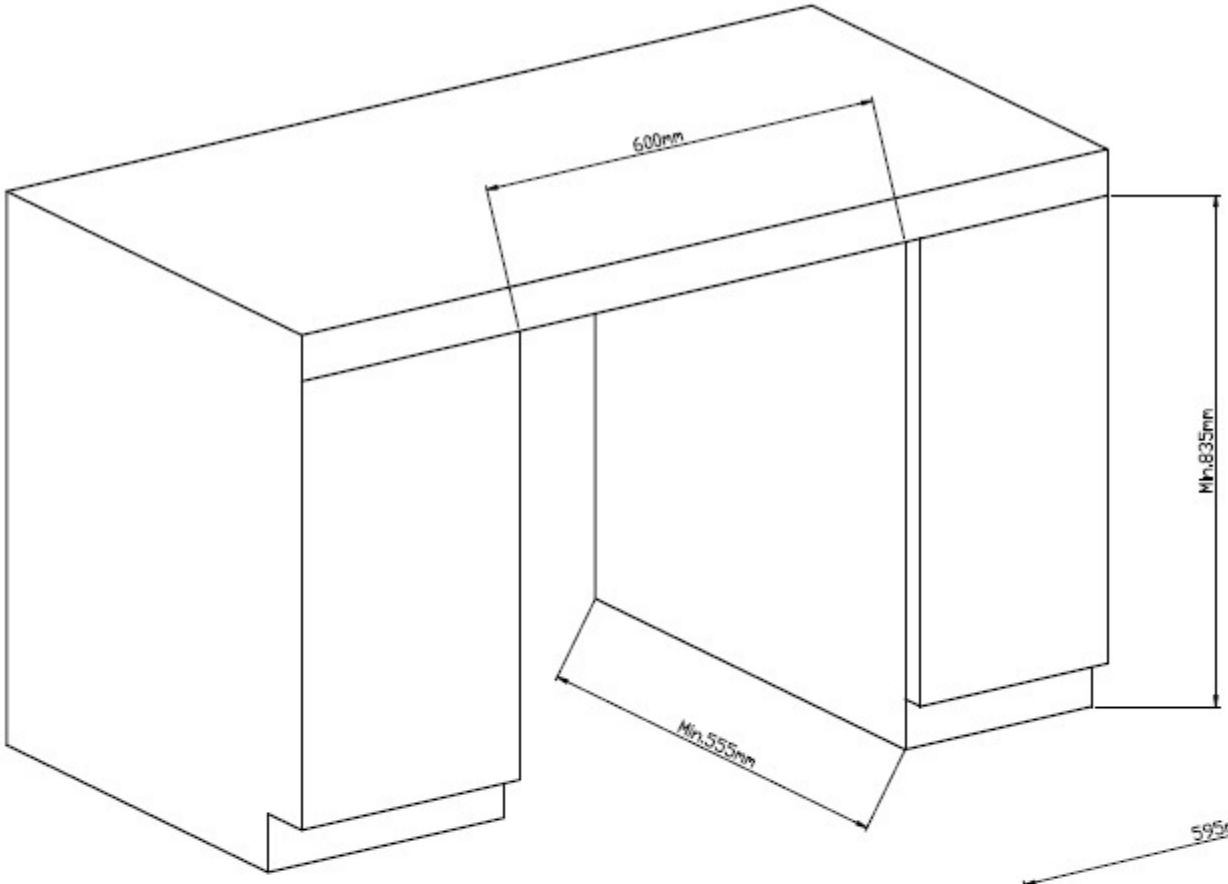
600mm
Min.835mm
Min.555mm

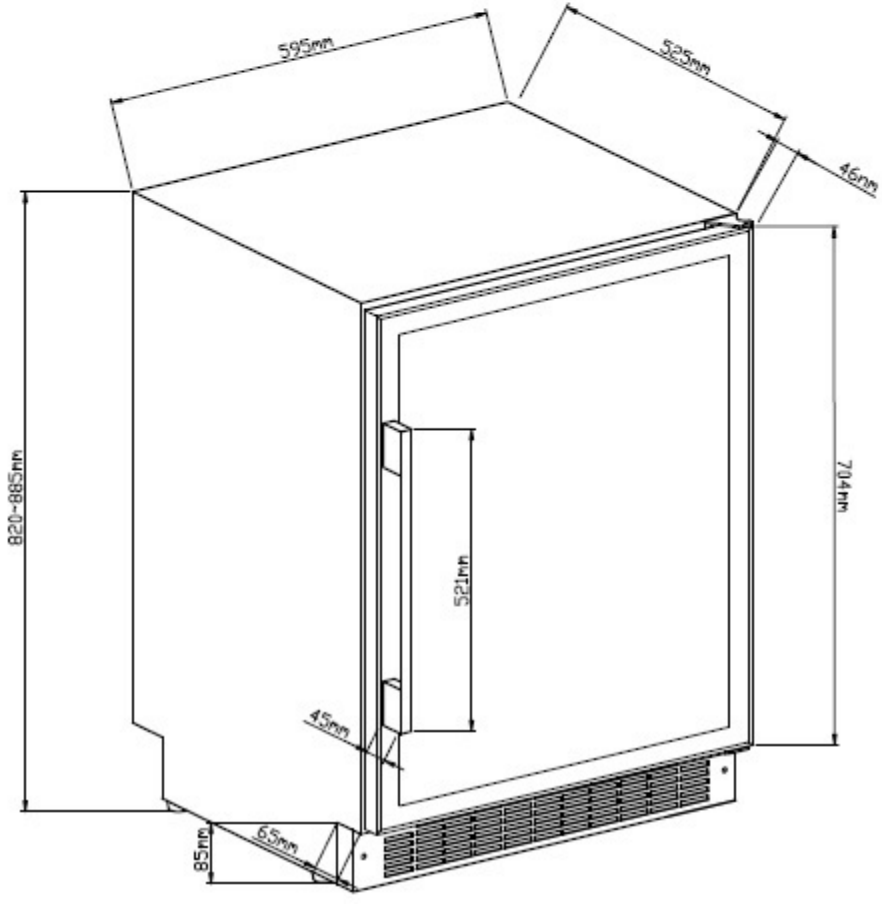
595mm
525mm
46mm
820-885mm
704mm
521mm
45mm
85mm
65mm